GENERAL NOTES

1. THE CONTRACTOR SHALL VERIFY DIMENSIONS AND SITE CONDITIONS BEFORE STARTING WORK AND THE DESIGNER SHALL BE NOTIFIED IMMEDIATELY OF ANY DISCREPANCIES. IN NO CASE SHALL DIMENSIONS BE SCALED FROM PLANS, SECTIONS, OR DETAILS ON THESE DRAWINGS.
2. ALL OMISSIONS AND CONFLICTS BETWEEN THE VARIOUS ELEMENTS OF THE WORKING DRAWINGS AND OR SPECIFICATIONS SHALL BE BROUGHT TO THE ATTENTION OF THE ENGINEER BEFORE PROCEEDING WITH ANY WORK SO INVOLVED.
3. NO STRUCTURAL MEMBER SHALL BE CUT FOR PIPES, DUCTS, ETC., UNLESS NOTED.
4. THE CONTRACTOR SHALL DETERMINE THE LOCATION OF EXISTING UTILITY SERVICES IN THE AREA TO BE EXCAVATED PRIOR TO BEGINNING OF EXCAVATION.
5. ALL WORKMANSHIP AND MATERIALS SHALL CONFORM TO THE REQUIREMENTS OF THE 2018 EDITION OF THE "NC STATE BUILDING CODE".
6. THESE DRAWINGS REPRESENT THE FINISHED STRUCTURE AND DO NOT INDICATE THE METHOD OF CONSTRUCTION. THE CONTRACTOR IS RESPONSIBLE FOR ALL TEMPORARY BRACING, SHORING, AND SUPPORT NECESSARY TO ACHIEVE THE FINISHED STRUCTURE.

FOUNDATION NOTES:

1. MAXIMUM DESIGN SOIL PRESSURE:
   - CODE MINIMUM: 2000 PSF
   - CONTINUOUS FOOTINGS: 2000 PSF
   - PAD FOOTINGS: 2000 PSF
2. SEE SOILS REPORT BY: N/A
   PROJECT NO.: N/A
   DATED N/A
3. ALL FOOTINGS TO BE A MINIMUM OF: 12" BELOW NATURAL GRADE; 12" BELOW FINISHED GRADE
4. SOILS COMPACTION AND SITE PREPARATION TO BE IN ACCORDANCE WITH SOILS REPORT (AS APPLICABLE). IT IS THE CONTRACTOR'S RESPONSIBILITY TO VERIFY SOIL BEARING CAPACITY.
5. FINISH EXCAVATION FOR FOUNDATION SHALL BE NEAT AND TRUE TO LINE WITH LOOSE MATERIAL REMOVED FROM EXCAVATION.
6. THE FOOTING EXCAVATIONS SHALL BE KEPT FREE FROM LOOSE MATERIAL AND STANDING WATER AND, BEFORE ANY FOOTING CONCRETE IS PLACED, SHALL BE CHECKED AND APPROVED BY CONTRACTOR FOR COMPLIANCE WITH THE REQUIREMENTS.
7. SIDE OF FOUNDATION MAY BE POURED AGAINST STABLE EARTH (U.O.N.).
8. CONTRACTOR SHALL PROTECT ALL UTILITY LINES, ETC.. ENCOUNTERED DURING EXCAVATION AND BACKFILLING.
9. CONTRACTOR TO BRACE OR PROTECT ALL RETAINING WALLS FROM LATERAL LOADS UNTIL SUPPORTING FLOORS, WALLS AND/OR SLABS ARE COMPLETELY IN PLACE AND HAVE BEEN SHEATHED PER PLAN OR ATTAINED FULL STRENGTH.
10. FOOTING BACKFILL AND UTILITY TRENCH BACKFILL WITHIN BUILDING AREA SHALL BE MECHANICALLY COMPACTED IN LAYERS TO THE APPROVAL OF THE GEOTECHNICAL ENGINEER, AS APPLICABLE. FLOODING WILL NOT BE PERMITTED.
11. ALL SILL PLATES SHALL BE TREATED SYP W/ \"~ A/B x 12" @ 6' O.C. (U.O.N. ON PLANS) W/ 3/16"x2"x2" PLATE WASHERS.
12. ALL CONCRETE AND MASONRY FOUNDATION WALLS ARE TO BE CONSTRUCTED IN ACCORDANCE W/ NC RESIDENTIAL BUILDING CODE R404, ACI 318, ACI 332, NCMA TR68-A, OR ACE 530/ASCE5/TMS 402. FOUNDATION WALLS MAY BE STEPPED AND FRAMED W/ 2x6 @ 16" O.C. KNEE WALLS WHERE GRADE PERMITS.

CONCRETE NOTES:

1. CONCRETE IN ALL WORK SHALL HAVE 3000 PSI ULTIMATE COMPRESSIVE STRENGTH AT 28 DAYS.
2. CEMENT SHALL CONFORM TO ASTM C-15, TYPE 1 OR TYPE II.
3. AGGREGATES FOR NORMAL WEIGHT CONCRETE SHALL CONFORM TO ASTM C-33. AGGREGATES FOR SHOTCRETE/GUNITE SHALL NOT EXCEED ¾".
4. READY MIX CONCRETE SHALL BE MIXED AND DELIVERED IN ACCORDANCE WITH ASTM C-94-81.
5. ADMIXTURE MAY BE USED WITH THE PRIOR APPROVAL OF THE ENGINEER. ADMIXTURE (COMPLYING WITH ASTM A494) USE TO INCREASE THE WORKABILITY OF THE CONCRETE SHALL NOT BE CONSIDERED TO REDUCE THE SPECIFIED MINIMUM CEMENT (CALCIUM CHLORIDE SHALL NOT BE USED).
6. WATER SHALL BE CLEAN, FREE FROM DELETERIOUS AMOUNT OF ACIDS, ALKALIS OR ORGANIC MATERIALS.
7. SLUMPS: THE MAXIMUM SLUMP SHALL NOT EXCEED 5". DURING TEMPERATURES ABOVE 80°F, MAXIMUM OF 6" SLUMP IS PERMISSIBLE PROVIDED THE MIX DESIGN IS REVISED ACCORDINGLY BY THE TESTING LABORATORY, AS APPLICABLE. MEASURE SLUMP IN ACCORDANCE WITH "METHOD OF TEST FOR SLUMP" OF PORTLAND CEMENT CONCRETE ASTM C143.
8. IF APPLICABLE, 3/4" DEEP CONTROL JOINTS ARE TO BE SAWCUT TO SUBDIVIDE ALL FLOOR SLABS ON GRADE INTO APPROXIMATELY SQUARE AREAS OF 400 SQ FT OR LESS. CONTRACTOR IS RESPONSIBLE FOR ADJUSTING OR ADDING CONTROL JOINTS AS NECESSARY.

ENGINEERED WOOD NOTES:

1. ENGINEERED LUMBER EXPOSED TO EXTERIOR CONDITIONS MUST BE ADEQUATELY WEATHER-PROOFED (BY OTHERS)
2. ENGINEERED WOOD SHALL BE "MICROLLAM" LVLs AS INDICATED ON PLANS, MANUFACTURED BY WEYERHAUESER, U.O.N (EQUIVALENT OR BETTER SUBSTITUTE IS ALLOWED) W/ MULTI-PLY MEMBERS BUILT-UP PER MFR REQUIREMENTS.

   ALLOWABLE DESIGN STRESSES
   (LVL) Fb = 2,600 PSI
   E = 2.0 x 10^6 PSI
   Fv = 285 PSI
3. PREFABRICATED WOOD MEMBERS DESIGNATED "PSL" SHALL BE "PARALLAM" 1.8E PSLs MANUFACTURED BY WEYERHAEUSER, U.O.N. (EQUIVALENT OR BETTER SUBSTITUTE IS ALLOWED).
   ALLOWABLE DESIGN STRESSES:
   (PSL) Fb = 2,400 PSI
   E = 1.8 x 10^6 PSI
   Fv = 190 PSI
   Fc (PERP) = 425 PSI
4. PREFABRICATED WOOD MEMBERS DESIGNATED "PSL PLUS" SHALL BE TREATED "PARALLAM PLUS" PSLs (SERVICE LEVEL 2) AS INDICATED ON PLANS, MANUFACTURED BY WEYERHAEUSER, U.O.N. (EQUIVALENT OR BETTER SUBSTITUTE IS ALLOWED).
   ALLOWABLE DESIGN STRESSES:
   (PSL) Fb = 1,827 PSI
   E = 1.46 x 10^6 PSI
   Fv = 197 PSI
   Fc (PERP) = 338 PSI
5. PRE-FABRICATED WOOD I-JOISTS SHALL BE TJI BY WEYERHAUESER OR APPROVED EQUIVALENT. BRACING, WEB STIFFENERS, AND OTHER SPECIAL CONDITIONS SHALL BE DETAILED AND INSTALLED PER MANUFACTURER'S RECOMMENDATIONS.

DESIGN PARAMETERS:

WIND LOADS: EXPOSURE B
115 MPH

REINFORCING STEEL NOTES:

1. STEEL REINFORCEMENT SHALL BE: GR 60 = #4 & SMALLER
   ASTM A615 GR. 60 = #5 & LARGER
   ASTM A185 = WELDED WIRE FABRIC
2. REINFORCING DETAILING AND PLACING SHALL BE IN ACCORDANCE WITH THE CONCRETE REINFORCING STEEL INSTITUTE "MANUAL OF STANDARD PRACTICE" LATEST EDITION.
3. ALL REINFORCING STEEL, ANCHOR BOLTS, DOWELS, AND INSERTS SHALL BE WELL SECURED IN POSITION PRIOR TO PLACING CONCRETE.
4. REINFORCING STEEL SHALL BE PROVIDED WITH THE FOLLOWING AMOUNTS OF CONCRETE COVER:

   FOOTINGS (CONC. DEPOSITED AGAINST EARTH).....3"

   CONC. SURFACE (FORMED) EXPOSED TO EARTH OR WEATHER

   #6 THROUGH #18 BARS:.....2"
   #5 & SMALLER:.....1 1/2"

   CONC. NOT EXPOSED TO EARTH OR WEATHER:

   SLAB, WALLS & JOIST:

   #14 & #18 BARS:.....1 1/2"
   #11 BAR & SMALLER:.....3/4"
   BEAMS, COLUMNS :
   PRIMARY REINFORCEMENT TIES STIRRUPS, SPIRALS:..... 1 1/2"

WOOD NOTES:

1. ALL WOOD FRAMING SHALL BE AS FOLLOWS (U.O.N.):

   A. ROOF RAFTERS & CEILING JOISTS:
      NO.1/NO.2 SPRUCE PINE FIR (SPF)
   B. FLOOR JOISTS:

   NO.2 SOUTHERN YELLOW PINE (SYP)
2. WOOD GRADES (U.O.N.)

   A. FOR HORIZONTAL MEMBERS:

JOISTS & RAFTERS	GRADE:	NO. 2
BEAMS & STRINGERS	GRADE:	NO. 2 (U.O.N.)
PURLINS	GRADE:	NO. 1
SUB-PURLINS:		
2X4	GRADE:	NO. 1
2X6	GRADE:	NO. 2
LEDGERS & NAILERS	GRADE:	NO. 2
HEADERS	GRADE:	NO. 2 (U.O.N.)

   B. FOR VERTICAL MEMBERS TOP & BOTTOM PLATES: MATCH VERTICAL MEMBERS,

   GRADE NO. 2 MIN (U.N.O.).

4X POST	GRADE:	NO. 2
6X POST	GRADE:	NO. 2
STUDS:	GRADE:	NO. 2
3. FRAMING IN CONTACT WITH CONCRETE OR MASONRY, OR MEMBERS EXPOSED TO WEATHER SHALL BE NO. 2 SOUTHERN YELLOW PINE (SYP) TREATED IN ACCORDANCE WITH AWPA C22 WITH THE FOLLOWING DESIGN PROPERTIES:
   Fb = 1,050 PSI Fv = 55 PSI E = 1.6x10^6 PSI
   SILL AND LEDGER BOLTS SHALL BE PLACED 12" MAX FROM PL ENDS AND NOTCHES AND SPACED AT 6' O.C. MAX, U.O.N. (2 BOLTS MIN/PIECE OF PL).
4. ALL PLYWOOD AND OSB SHALL BE CERTIFIED AS CONFORMING TO U.S. PRODUCTS STANDARD PS-2-92 BY A CERTIFICATION AGENCY APPROVED BY THE NATIONAL EVALUATION SERVICES INC. OR I.C.C.
5. ALL BOLT HEADS AND NUTS BEARING ON WOOD SHALL HAVE WASHERS. ALL BOLT HOLES IN WOOD SHALL BE DRILLED 1/16" MAXIMUM DIAMETER LARGER THAN THE NOMINAL BOLT DIAMETER.
6. PROVIDE JOIST(S) UNDER ALL PARALLEL NON-BEARING PARTITIONS AND SOLID BLOCKING UNDER ALL PERPENDICULAR NON-BEARING PARTITIONS.
7. ALL FRAMING ANCHORS, POST CAPS, COL. BASES, ETC. NOTED ARE MANUFACTURED BY 'SIMPSON' OR APPROVED EQUAL. OTHER HARDWARE COMPANIES (E.I. ACS, USP) MAY BE SUBSTITUTED PROVIDED ALL PRODUCTS HAVE A CURRENT ICC-ES REPORT AND EQUIVALENT LOAD CAPACITIES. USE COMMON NAILS AS SPECIFIED BY MANUFACTURER.
8. PLYWOOD FLOOR SHEATHING SHALL BE GLUED TO FLOOR JOISTS WITH ONE CONTINUOUS BEAD OF AN ADHESIVE COMPOUND CONFORMING TO ASTM D 3024 AND IN ACCORDANCE WITH THE MANUFACTURER'S DIRECTIONS.
9. CUTTING, NOTCHING OR DRILLING OF BEAMS OR JOISTS SHALL BE PERMITTED ONLY AS DETAILED OR APPROVED BY THE ENGINEER AND/OR PER R502.8 & R802.7.1
10. BOLTS IN WOOD SHALL NOT BE LESS THAN 7 DIAMETERS FROM THE END AND 4 DIAMETERS FROM THE EDGE OF THE MEMBER (U.O.N.).
11. MOISTURE CONTENT OF WOOD AT TIME OF PLACING SHALL NOT EXCEED 19%.
12. ALL NAILS SHALL BE COMMON NAILS (U.O.N.).
13. PROVIDE SOLID BLOCKING TO GIRDERS AND/OR FOUNDATION BENEATH POINT LOADS AS DENOTED BY: ☑
14. LOAD BEARING HEADERS SHALL CONFORM W/ TABLES R602.7(1),(2) & (3) W/ (1) JACK STUD EACH END (U.O.N). SECURE HEADERS TO EACH JACK STUD W/ (4) 8d NAILS. BEAM/HEADER SUPPORTS REQUIRING MORE THAN (1) JACK ARE DENOTED BY: ☒ ⟷ 2 (WHERE 2 JACKS ARE REQ'D FOR EXAMPLE). KING STUDS AT EACH END OF THE OPENING SHALL BE ⅔ THE NUMBER OF STUDS INTERRUPTED BY THE OPENING, TYP (U.O.N.).
15. OVERFRAME ROOF W/ FLAT 2X10 PLATES W/ (2) 16d COMMON TO RAFTERS/TRUSSES AT FALSE VALLEYS.
16. ALL DECK FRAMING, BRACING. GUARDRAILS, AND ATTACHMENTS TO THE MAIN HOUSE STRUCTURE IS TO BE PER "APPENDIX M" OF THE NC RESIDENTIAL BUILDING CODE.
17. ALL MULTI-PLY JOISTS ARE TO BE SUPPORTED BY HANGERS AT FLUSH CONNECTIONS.
18. ALL MULTI-PLY JOISTS ARE TO BE BUILT-UP WITH (3) 10d COMMON NAILS AT EACH END & AT 12" O.C. STAGGERED TOP & BOTTOM ALONG THE LENGTH OF THE JOISTS.

REVISIONS	BY

STONEWALL
STRUCTURAL ENGINEERING
9203 Baileywick Rd, Suite #200
Raleigh, NC 27615
(919)407-8663
stonewalleng.com Lic. # P-0951

NORTH CAROLINA PROFESSIONAL SEAL 059145 ENGINEER JACOB H BLANKENSHIP

New Residential Construciton
Eliel Lopez
163 Summer Creek Ln
Sanford, North Carolina 27332

DATE	02.18.2025
SCALE	AS SHOWN
DRAWN	CTG
JOB	25-1177
SHEET	SP1

FOUNDATION NOTES:

1. ASSUMED SOIL BEARING CAPACITY IS 2,000 PSF. CONTRACTOR MUST CONTACT A SOILS ENGINEER IF UNSUITABLE SOILS ARE ENCOUNTERED.
2. ADEQUATE DRAINAGE SHALL BE PROVIDED FOR THE SURFACE AREA ADJACENT TO THE STRUCTURE SUCH THAT WATER DRAINS AWAY FROM STRUCTURE.
3. CONTRACTOR TO VERIFY DIMENSIONS PRIOR TO WORK.
4. FOR ADDITIONAL NOTES, SEE "SP" SHEETS.
5. "F.G.E." INDICATES FINISHED GRADE ELEVATION
6. "F.F.E." INDICATES FINISHED FLOOR ELEVATION
7. "FS (-X'-0")" INDICATES FOOTING STEP LOCATION AND REFERENCE TOP OF FOOTING ELEVATION
8. FOOTING DEPTHS SHOWN ON THIS PLAN ARE FOR REFERENCE ONLY. CONTRACTOR SHALL BE RESPONSIBLE FOR FIELD DETERMINING FOOTING STEPS TO ACCOMMODATE FINISH GRADES AROUND BUILDING. CONTRACTOR SHALL FIELD LOCATE FOOTING STEPS TO MAINTAIN MINIMUM FOOTING DEPTH OF 18" BELOW FINISHED GRADE. FOOTING DEPTH IS MEASURED FROM FINISHED GRADE TO BOTTOM OF FOOTING.
9. FOOTING ELEVATIONS SHOWN ON THIS PLAN ARE MEASURED RELATIVE TO FINISH FLOOR AT FIRST FLOOR. ELEVATIONS SHOWN ON THE STRUCTURAL DRAWINGS ASSUME A FINISH FLOOR ELEVATION OF 0'-0" AT THE FIRST FLOOR. ELEVATION 0'-0" IS A REFERENCE FLOOR ELEVATION ONLY. SEE CIVIL AND/OR ARCHITECTURAL DRAWINGS FOR ACTUAL FLOOR ELEVATIONS.

LEGEND:

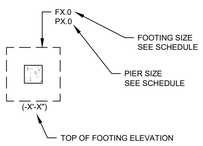

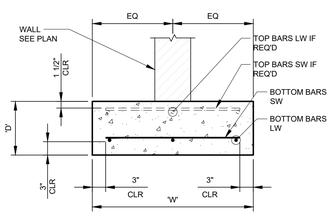

WALL FOOTING SCHEDULE				
FOOTING		REINFORCING		REMARKS
MARK	SIZE W x D	BOTTOM BARS	TOP BARS	
WF2.0	2'-0" x 1'-0"	(2) #5 CONT. LW #3 AT 48" OC SW	N/A	
WF2.5	2'-6" x 1'-0"	(2) #5 CONT. LW #3 AT 48" OC SW	N/A	

1. "TS" DENOTES THICKENED SLAB (POUR MONOLITHICALLY WIT SLAB ON GRADE)
2. "E.W." DENOTES EACH WAY
3. "LW" DENOTES LONG WAY
4. "SW" DENTES SHORT WAY

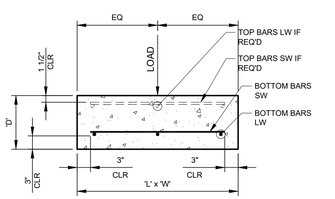

ISOLATED FOOTING SCHEDULE				
FOOTING		REINFORCING		REMARKS
MARK	SIZE L x W x D	BOTTOM BARS	TOP BARS	
F2.0	2'-0" x 2'-0" x 1'-0"	(3) #4 E.W.	N/A	
F2.5	2'-6" x 2'-6" x 1'-0"	(3) #4 E.W.	N/A	
F3.0	3'-0" x 3'-0" x 1'-0"	(3) #5 E.W.	N/A	

1. "F" DENOTES ISOLATED FOOTING (POURED SEPARATE FROM SLAB ON GRADE
2. "E.W." DENOTES EACH WAY
3. "LW" DENOTES LONG WAY
4. "SW" DENTES SHORT WAY

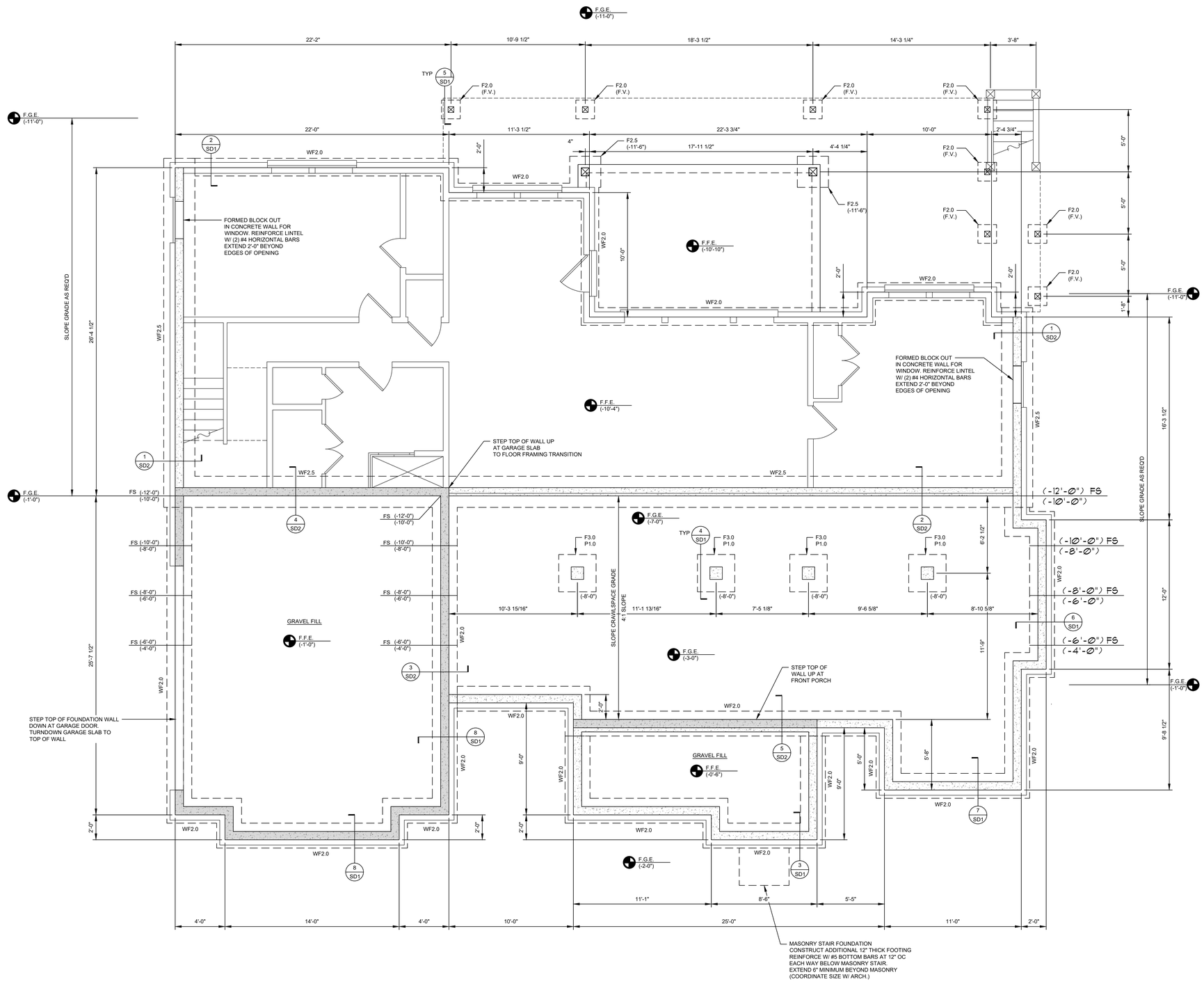

FOUNDATION PLAN
SCALE: ¼"=1'-0"

REVISIONS	BY

STONEWALL
STRUCTURAL ENGINEERING
9203 Baileywick Rd, Suite #200
Raleigh, NC 27615
(919)407-8663
stonewalleng.com Lic. # P-0951

NORTH CAROLINA PROFESSIONAL SEAL 059145 ENGINEER JACOB H. BLANKENSHIP

New Residential Construciton
Eliel Lopez
163 Summer Creek Ln
Sanford, North Carolina 27332

DATE	02.18.2025
SCALE	AS SHOWN
DRAWN	CTG
JOB	25-1177
SHEET	S1

SLAB NOTES:

1. SLAB 'S1' INDICATES 4" CONCRETE BASEMENT SLAB ON GRADE W/ 6x6 W1.4 x W1.4 W.W.F. ON VAPOR BARRIER AND 4" STONE BASE
   REFERENCE (-10'-4")
2. SLAB 'S2' INDICATES 4" CONCRETE GARAGE SLAB ON GRADE W/ 6x6 W1.4 x W1.4 W.W.F. ON VAPOR BARRIER AND 4" STONE BASE
   REFERENCE (-1'-0") - SLOPE SLAB TO OVERHEAD GARAGE DOOR
3. SLAB 'S3' INDICATES 4" CONCRETE PORCH SLAB ON GRADE W/ 6x6 W1.4 x W1.4 W.W.F. ON VAPOR BARRIER AND 4" STONE BASE
   REFERENCE (-0'-6")
4. SLAB 'S4' INDICATES 4" CONCRETE TERRACE SLAB ON GRADE W/ 6x6 W1.4 x W1.4 W.W.F. ON VAPOR BARRIER AND 4" STONE BASE
   REFERENCE (-10'-10")

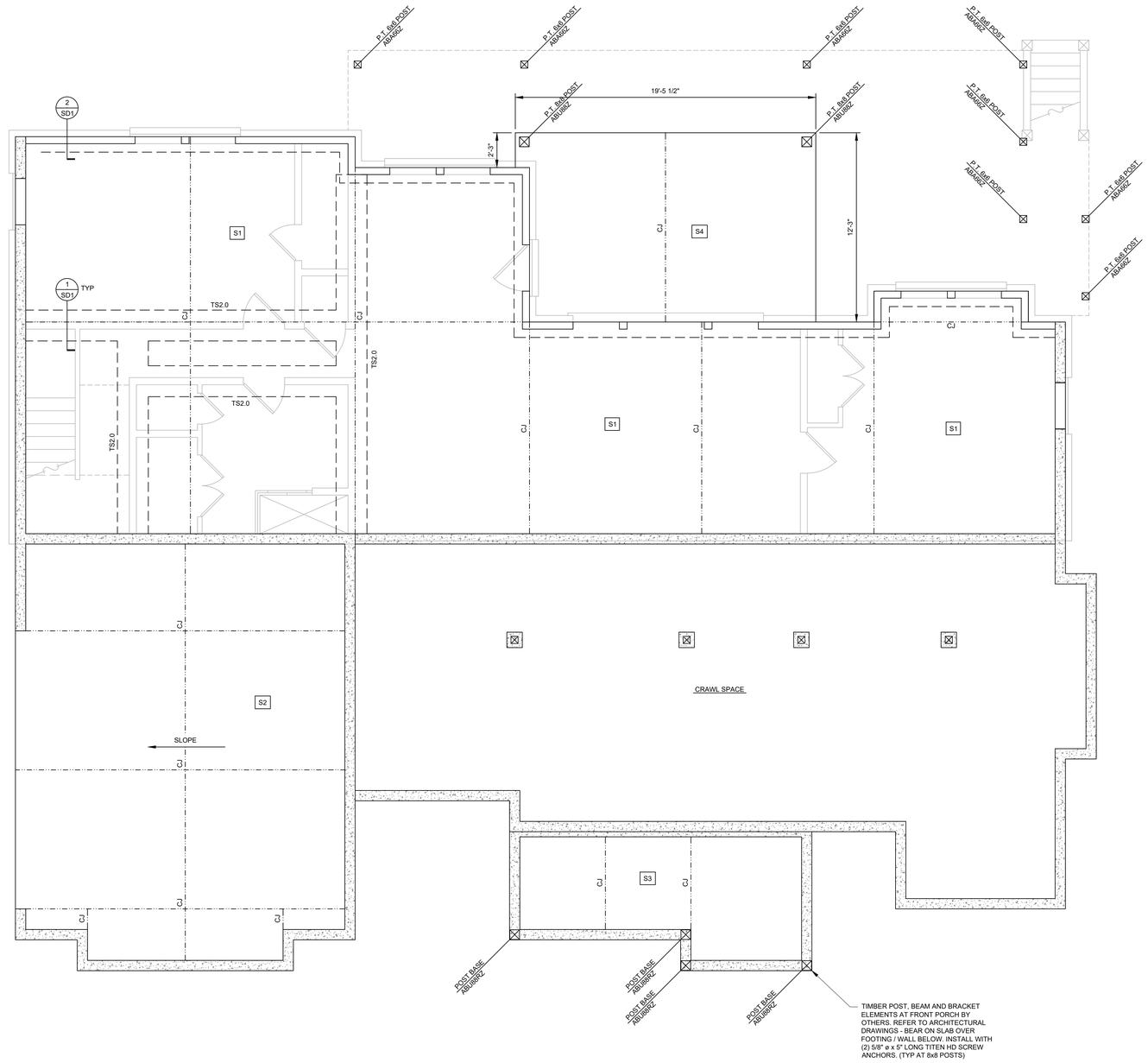

SLAB PLAN
SCALE: ¼"=1'-0"

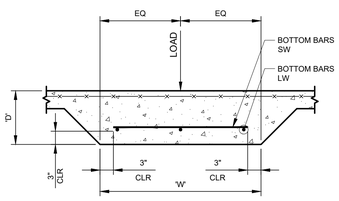

THICKENED SLAB SCHEDULE				
FOOTING		REINFORCING		REMARKS
MARK	SIZE W x D	BOTTOM BARS	TOP BARS	
TS2.0	2'-0" x 10"	(2) #4 CONT. LW #3 AT 48" OC SW	N/A	

1.	"TS"	DENOTES THICKENED SLAB (POUR MONOLITHICALLY WIT SLAB ON GRADE)
2.	"E.W.	DENOTES EACH WAY
3.	"LW"	DENOTES LONG WAY
4.	"SW"	DENTES SHORT WAY

REVISIONS	BY

STONEWALL
STRUCTURAL ENGINEERING
9203 Baileywick Rd, Suite #200
Raleigh, NC 27615
(919)407-8663
stonewalleng.com Lic. # P-0951

NORTH CAROLINA PROFESSIONAL ENGINEER SEAL 059145 JACOB H. BLANKENSHIP

New Residential Construciton
Eliel Lopez
163 Summer Creek Ln
Sanford, North Carolina 27332

DATE	02.18.2025
SCALE	AS SHOWN
DRAWN	CTG
JOB	25-1177
SHEET	S2

FIRST FLOOR FRAMING NOTES:

1. FLOOR SHEATHING IS TO BE [" PLY T & G (48/24) CDX BN. & EN 10d @ 6", F.N. 10d @ 12" (U.O.N.) ALTERNATE: #8 x2" COARSE THREADED YELLOW ZINC FLATHEAD WOOD SCREWS MAY BE USED IN-LIEU OF 10d COMMONS (ER-5053).
2. NO PENETRATIONS ALLOWED IN SHEARWALL TOP & BOTTOM PLATES, JOISTS, BEAMS, ETC. UNLESS SPECIFICALLY CALLED OUT & DETAILED ON STRUCTURAL DRAWINGS OR AS ALLOWED BY CODE.
3. ALL FRAMING TO BE FASTENED TO FLUSH BEAMS AND LEDGERS USING FACE HANGERS, TYP (U.O.N.).
4. FRAMING MEMBER LOCATIONS ARE FOR REFERENCE ONLY. THE CONTRACTOR IS RESPONSIBLE FOR EXACT LOCATIONS, AS WELL AS ADDING MEMBERS BENEATH NON-BEARING WALLS THAT ARE GREATER THAN 4' LONG.
5. CONTRACTOR TO VERIFY DIMENSIONS PRIOR TO WORK.
6. FOR ADDITIONAL NOTES SEE "SP" SHEETS.

LEGEND:

INDICATES 2X6 @ 16" O.C. STUD WALI @ BASEMENT LEVEL. SHEATHE EXTERIOR WALLS W/ 7/16" SHEATHING W/ EDGE NAILING 10d @ 6" O.C. AND FIELD NAILING 10d @ 12"O.C.

OF JACKS — # OF KINGS: 4 4 — INDICATES NUMBER OF JACK AND KING STUDS REQUIRED

2 — INDICATES NUMBER OF 2x STUDS BENEATH BEAM

(A) INSTALL BEAM W/ HSLQ37-SDS2.5 EACH FACE TO BASEMENT WALL SILL PLATE

(B) EXTEND BEAM 1'-0" AT BEARING. FASTEN TO WALL PLATES BELOW W /(2) LTP4 CLIPS EACH FACE.

(C) HUCQ210-3 CONCEALED HANGER. RIP (1) BEAM PLY SHORT TO INSTALL

(D) HHUS210-4 FACE HANGER

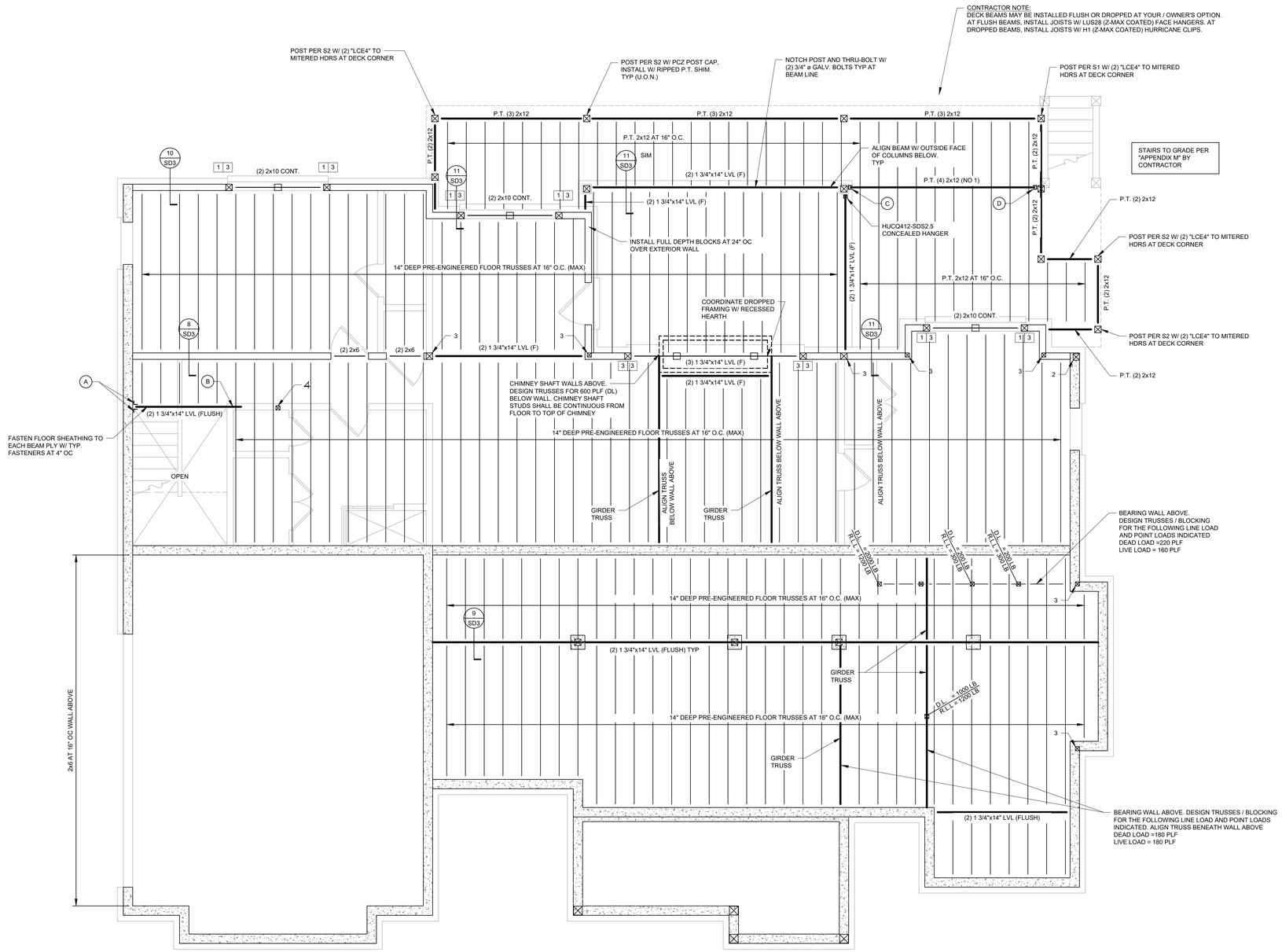

FIRST FLOOR FRAMING PLAN
SCALE: ¼"=1'-0"

NOTE:
SEE FOUNDATION PLAN AND FOUNDATION DETAILS FOR FLOOR FRAMING CONNECTIONS TO FOUNDATION WALL BELOW

REVISIONS	BY

STONEWALL
STRUCTURAL ENGINEERING
9203 Baileywick Rd, Suite #200
Raleigh, NC 27615
(919)407-8663
stonewalleng.com Lic. # P-0951

NORTH CAROLINA PROFESSIONAL SEAL 035145 ENGINEER JACOB H BLANKENSHIP

New Residential Construciton
Eliel Lopez
163 Summer Creek Ln
Sanford, North Carolina 27332

DATE	02.18.2025
SCALE	AS SHOWN
DRAWN	CTG
JOB	25-1177
SHEET	S3

BONUS ROOM FLOOR FRAMING NOTES:

1. SHEATHING IS TO BE [" PLY T & G (48/24) CDX BN. & E.N. 10d @ 6", FN. 10d @ 12" (U.O.N.) OR CODE APPROVED ALTERNATIVE.
2. (10) 16d EACH SIDE OF TOP PLATE SPLICES (TYP. U.O.N.).
3. ALL FRAMING TO BE FASTENED TO FLUSH BEAMS AND LEDGERS USING FACE HANGERS, TYP (U.O.N.).
4. FRAMING MEMBERS ARE FOR REFERENCE ONLY. THE CONTRACTOR IS RESPONSIBLE FOR EXACT LOCATIONS.
5. CONTRACTOR TO VERIFY DIMENSIONS PRIOR TO WORK.
6. FOR ADDITIONAL NOTES, SEE "SP" SHEETS.
7. TOP OF ATTIC JOISTS SHALL BE BRACED. BRACING MAY BE PLYWOOD FLOOR SHEATHING OR CONTINUOUS LINES OF 2x4 STRONGBACKS AT 6'-0" OC. (MAX SPACING) NAILED TO EACH JOIST W/ (2) 16d NAILS. INSTALL SOLID BLOCKING BETWEEN EVERY OTHER JOIST AT BEARING WALLS.

LEGEND:

NDICATES 2X6 @ 16" O.C. STUD WALL @ MAIN FLOOR LEVEL. SHEATHE EXTERIOR WALLS W/ 7/16" SHEATHING W/ EDGE NAILING 10d @ 6" O.C. AND FIELD NAILING 10d @ 12"O.C.

OF JACKS — # OF KINGS — 4 4 — INDICATES NUMBER OF JACK AND KING STUDS REQUIRED

2 — INDICATES NUMBER OF 2x STUDS BENEATH BEAM

INDICATES POINT LOAD FROM ABOVE

A — INDICATES HORIZ "CS16" STRAP FROM TOP OF T. PLATES TO UNDERSIDE OF BEAM W/ (11) 10d NAILS EA END (22 NAILS TOTAL PER STRAP) PRE-STALL STRAP PRIOR TO PLACING BEAM

B — INDICATES (2) "A34" ANGLES FROM SIDE OF CEILING BEAM TO TOP PLATES W/ (8) #9 x 1 1/2" LONG SD SCREW (ANGLES MAY BE FASTENED TO SIDE OF ALIGNED RAFTERS)

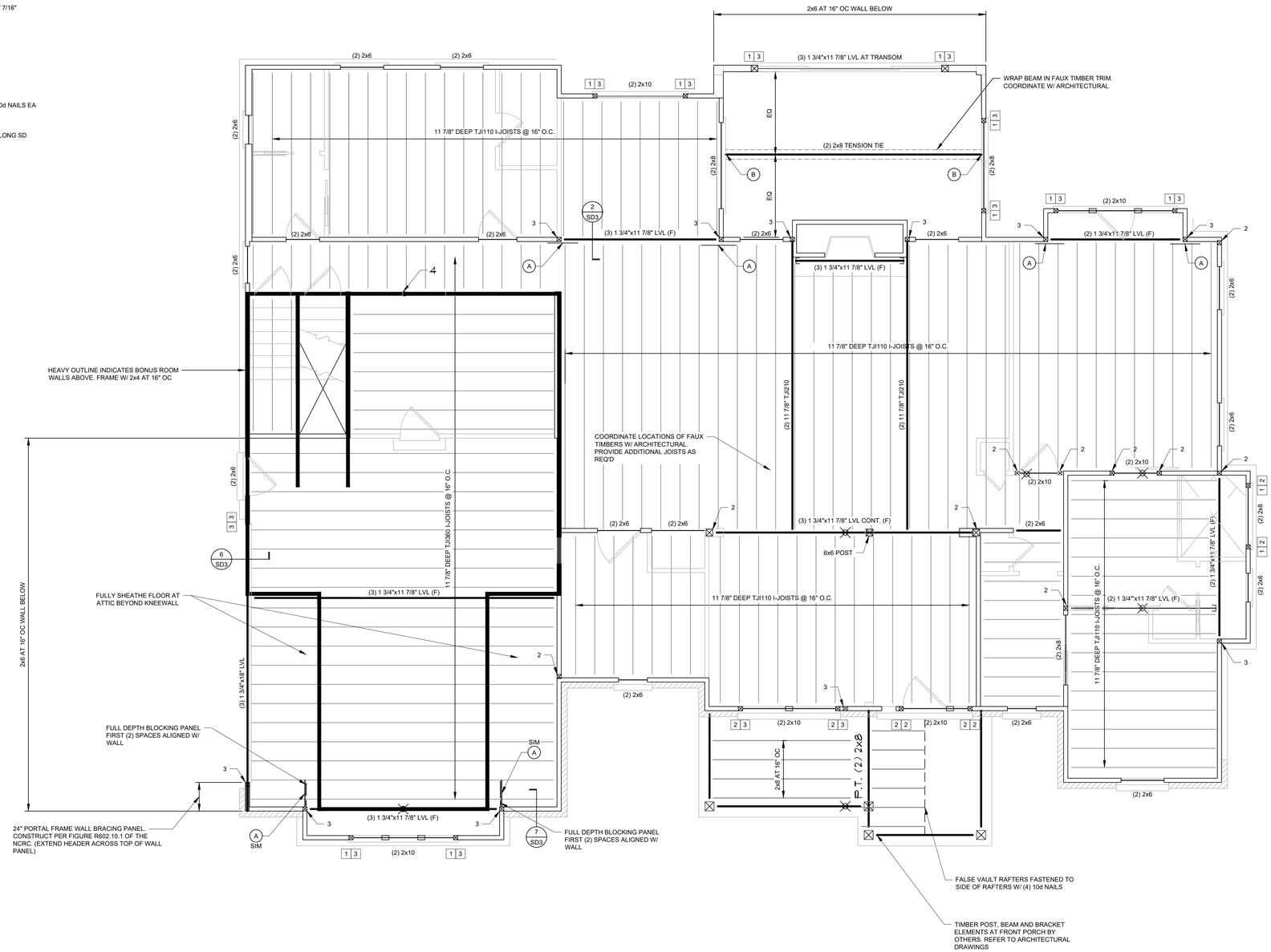

ATTIC FRAMING PLAN
SCALE: ¼"=1'-0"

REVISIONS	BY

STONEWALL
STRUCTURAL ENGINEERING
9203 Baileywick Rd, Suite #200
Raleigh, NC 27615
(919)407-8663
stonewalleng.com Lic. # P-0951

NORTH CAROLINA PROFESSIONAL ENGINEER SEAL 039195 JACOB H. BLANKENSHIP

New Residential Construciton
Eliel Lopez
163 Summer Creek Ln
Sanford, North Carolina 27332

DATE	02.18.2025
SCALE	AS SHOWN
DRAWN	CTG
JOB	25-1177
SHEET	S4

ROOF AND ATTIC FRAMING NOTES:

1. ROOF SHEATHING SHALL BE 15/32" (1/2" NOMINAL) CDX PLYWOOD OR EQUIVALENT OSB. FASTEN SHEATHING TO FRAMING W/ 10d NAILS AT 6" OC AT PANEL EDGES AND 12" OC IN FIELD OF PANELS.
2. RAFTERS TO BE 2x8 AT 16" oc U.O.N. RIDGES, HIPS, AND VALLEYS SHALL BE SINGLE PLY 2x12 U.O.N.
3. 24" MAX ROOF OVERHANG ALLOWED.
4. INSTALL CONVENTIONAL 2x COLLAR TIES AT ALL RIDGE LINES AT 48" O.C. (MAX).
5. GABLE END WALLS & DORMERS TO BE CONTINUOUSLY SHEATHED AS "CS-WSP".
6. DO NOT SPLICE HIP AND VALLEY BEAMS.
7. ALL RAFTERS TO BE FASTENED TO WALL TOP PLATES WITH "H2.5A" CLIPS.
8. (10) 16d EACH SIDE OF TOP PLATE SPLICES (TYP. U.O.N.).
9. ALL FRAMING TO BE FASTENED TO FLUSH BEAMS AND LEDGERS USING FACE HANGERS, TYP (U.O.N.).
10. FRAMING MEMBER LOCATIONS ARE FOR REFERENCE ONLY. THE CONTRACTOR IS RESPONSIBLE FOR EXACT LOCATIONS.
11. CONTRACTOR TO VERIFY DIMENSIONS PRIOR TO WORK.
12. FOR ADDITIONAL NOTES, SEE "SP" SHEETS.

LEGEND:

- INDICATES 2x4 @ 16" O.C. STUD WALL
- INDICATES OVER-BUILT ROOF FRAMING LIMITS FALSE FRAME VALLEYS ON 2x10 FLAT PLATE W/ (2) 16d COMMON TO EACH RAFTER
- # OF JACKS / # OF KINGS — 4 | 4 — INDICATES NUMBER OF JACK AND KING STUDS REQUIRED
- 2 — INDICATES NUMBER OF 2x STUDS BENEATH BEAM
- INDICATES LOCATION OF BRACE AT RAFTER LEVEL
- INDICATES DIRECTION OF BRACE - BRACES SHALL BE (2) 2x STUDS FORMING A "TEE" SHAPE GANGED W/ 16d NAILS AT 6" OC (2x4 AT 6' OR LESS, 2x6 AT 10' OR LESS, 2x8 AT 16' OR LESS)
- INDICATES POST BELOW BRACE (POST SHALL BE (3) 2x4 OR (2) 2x6 MIN.
- (A) INDICATES FASTEN STRADDLED RAFTER HEELS TO CEILING TIE BEAM W/ 1/2" ø THRU BOLT WITH NUT AND WASHER
- (B) INDICATES HANGER LSSR210-2
- (C) INDICATES (3) BAYS OF FULL-DEPTH DOUBLE BLOCKING ALIGNED WITH BEAM
- (D) INDICATES CS16 STRAP TIE W/ 15" END LENGTH AT BEAM AND CONTINUOUS ACROSS BLOCKING
- (E) INDICATES CS16 STRAP W/ 15" END LENGTHS FROM SIDE OF RIDGE TO SIDE OF STUDPACK BELOW

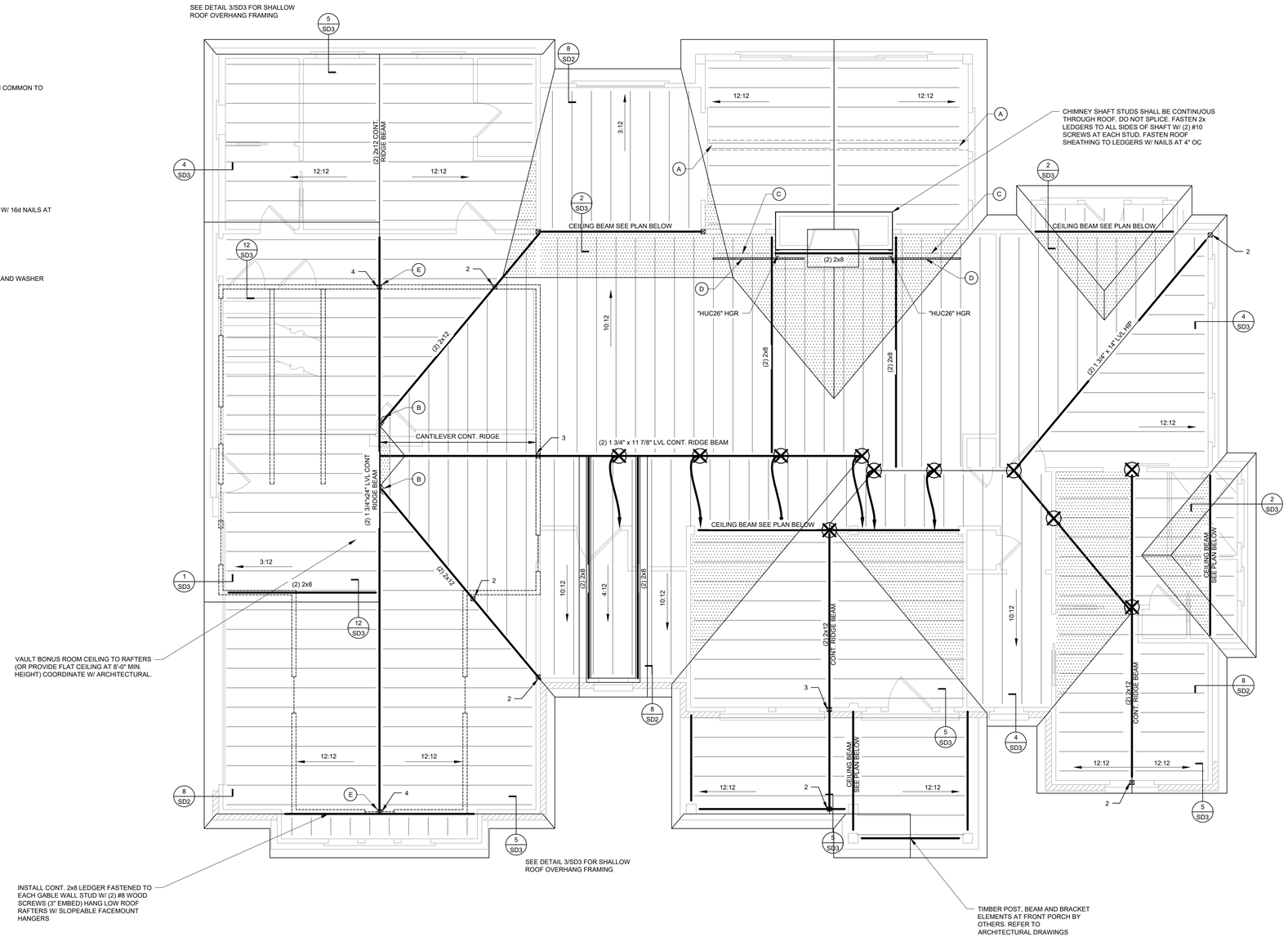

ROOF FRAMING PLAN

SCALE: ¼"=1'-0"

REVISIONS	BY

STONEWALL STRUCTURAL ENGINEERING
9203 Baileywick Rd, Suite #200
Raleigh, NC 27615
(919)407-8663
stonewalleng.com Lic. # P-0951

NORTH CAROLINA PROFESSIONAL SEAL 059195 ENGINEER JACOB H. BLANKENSHIP

New Residential Construciton
Eliel Lopez
163 Summer Creek Ln
Sanford, North Carolina 27332

DATE	02.18.2025
SCALE	AS SHOWN
DRAWN	CTG
JOB	25-1177
SHEET	S5

NOTE:
BROOM FINISH SLOPE TO DRAIN AWAY FROM BUILDING

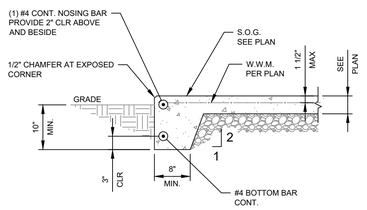

EXTERIOR SLAB EDGE DETAIL (TYP)

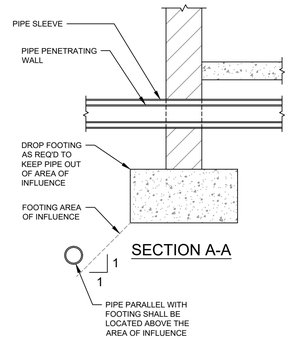

SECTION A-A

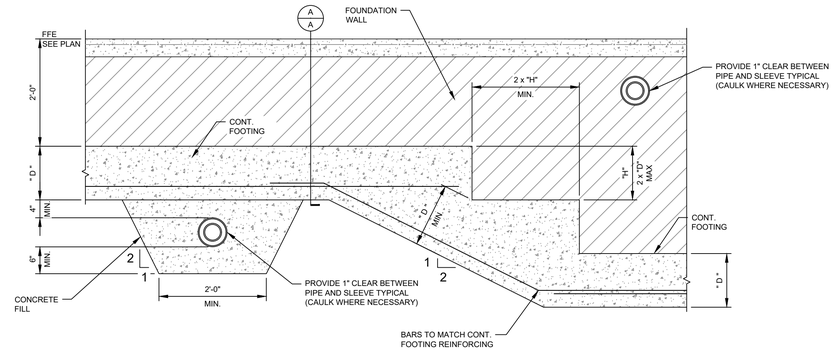

TYPICAL STEPPED FOOTING AND PIPING AT FOUNDATIONS (TYP)

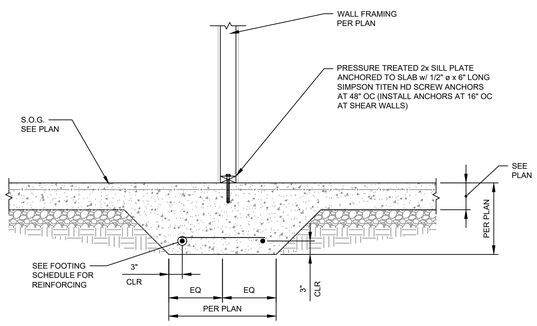

THICKENED SLAB AT INTERIOR WALL (1)

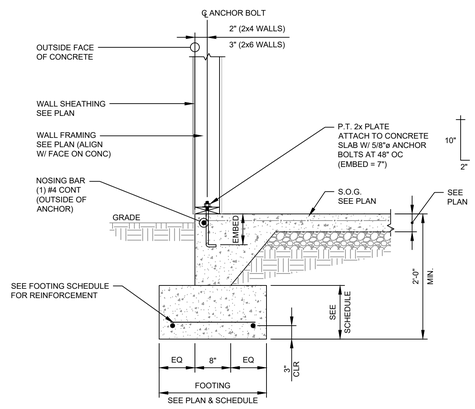

TURNDOWN SLAB AT BASEMENT WALK OUT (2)

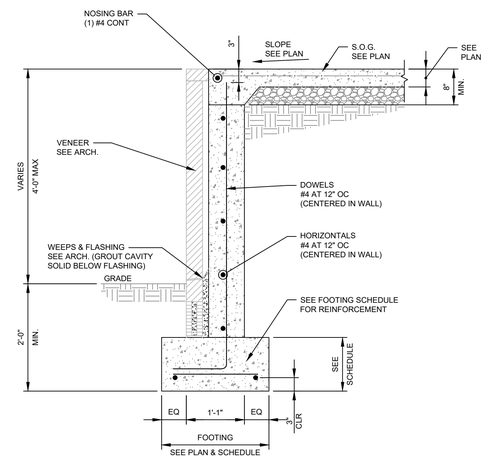

FOUNDATION AT PORCH (3)

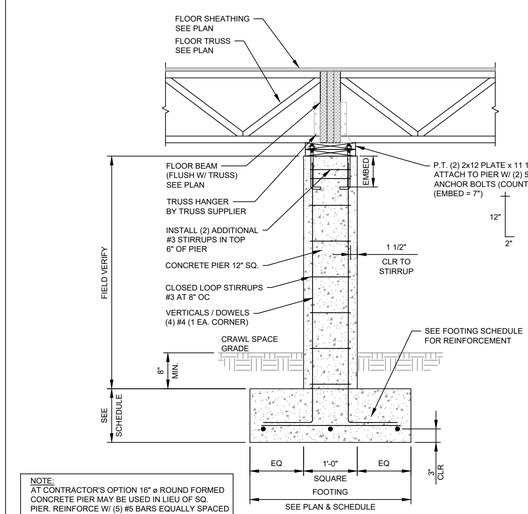

NOTE:
AT CONTRACTOR'S OPTION 16" ø ROUND FORMED CONCRETE PIER MAY BE USED IN LIEU OF SQ. PIER. REINFORCE W/ (5) #5 BARS EQUALLY SPACED AND #3 CLOSED LOOP STIRRUPS AT 8" OC

INTERIOR CONCRETE PIER AT FLUSH BEAM (4)

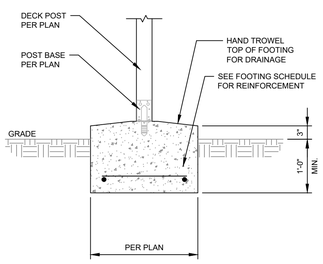

DECK POST FOOTING (5)

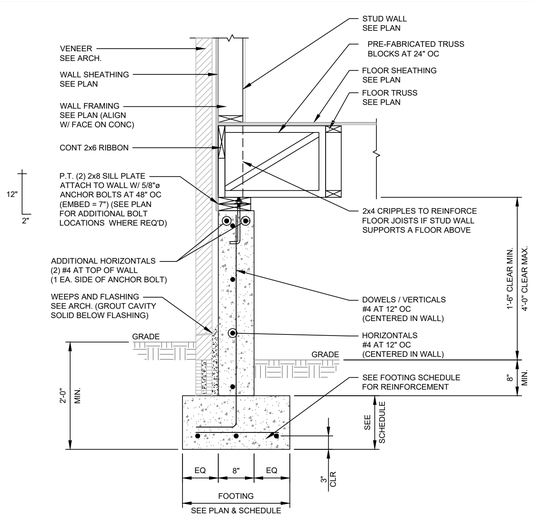

TRUSSES PARALLEL TO FOUNDATION WALL (6)

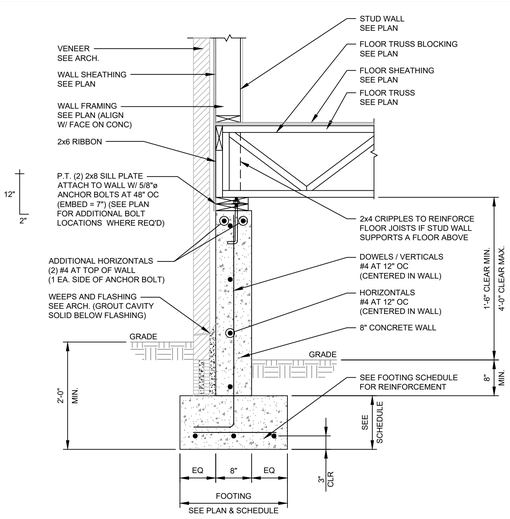

TRUSSES BEARING AT FOUNDATION WALL (7)

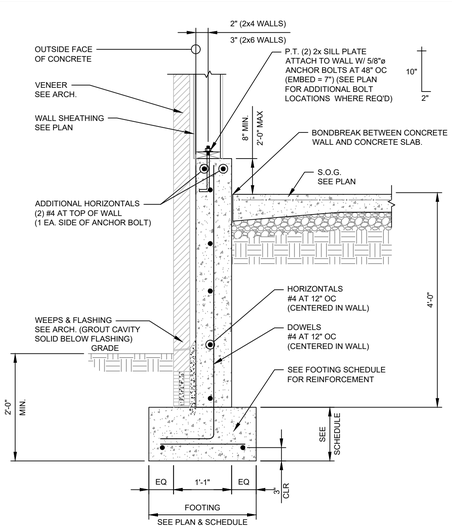

CONCRETE STEM WALL AT GARAGE (8)

REVISIONS	BY

STONEWALL
STRUCTURAL ENGINEERING
9203 Baileywick Rd, Suite #200
Raleigh, NC 27615
(919)407-8663
stonewalleng.com Lic. # P-0951

NORTH CAROLINA PROFESSIONAL SEAL 059145 ENGINEER JACOB H BLANKENSHIP

New Residential Construciton

Eliel Lopez
163 Summer Creek Ln
Sanford, North Carolina 27332

DATE	02.18.2025
SCALE	AS SHOWN
DRAWN	CTG
JOB	25-1177
SHEET	SD1

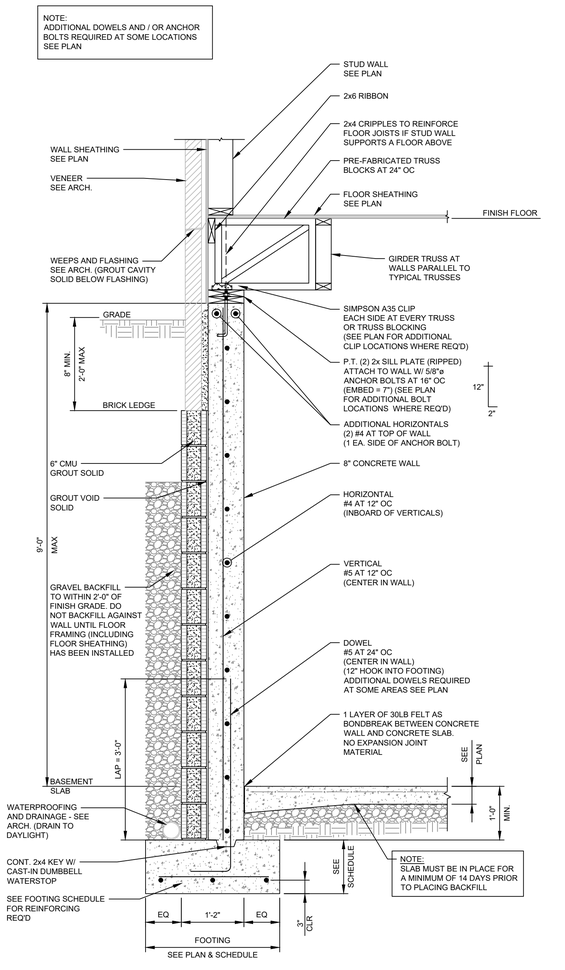

TRUSSES PARALLEL TO BASEMENT WALL (1)

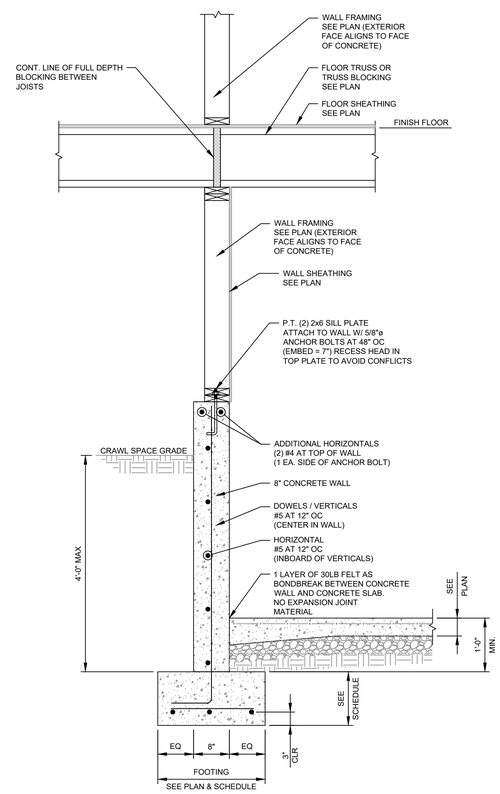

CRAWLSPACE TO BASEMENT FOUNDATION WALL (2)

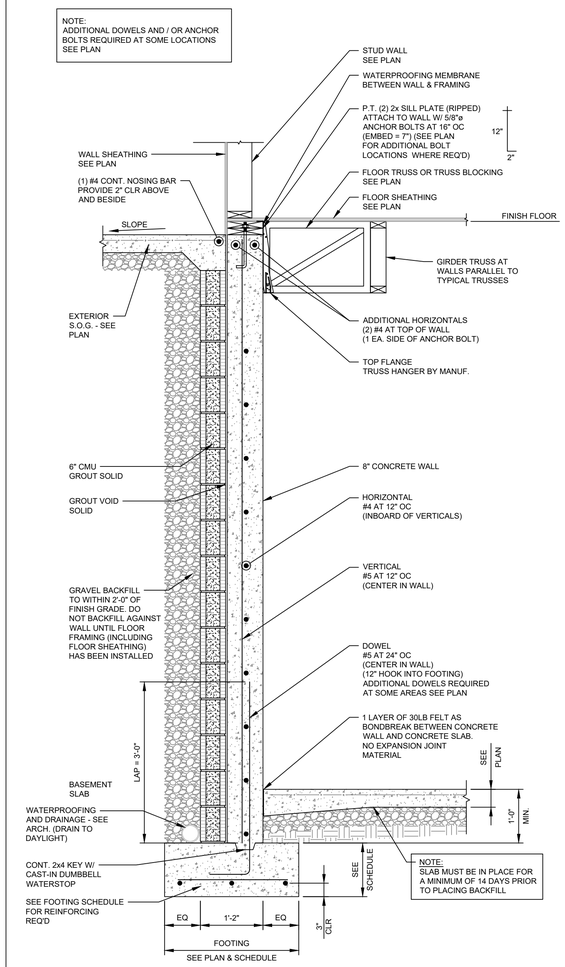

TRUSSES PARALLEL TO BASEMENT WALL AT GARAGE (3)

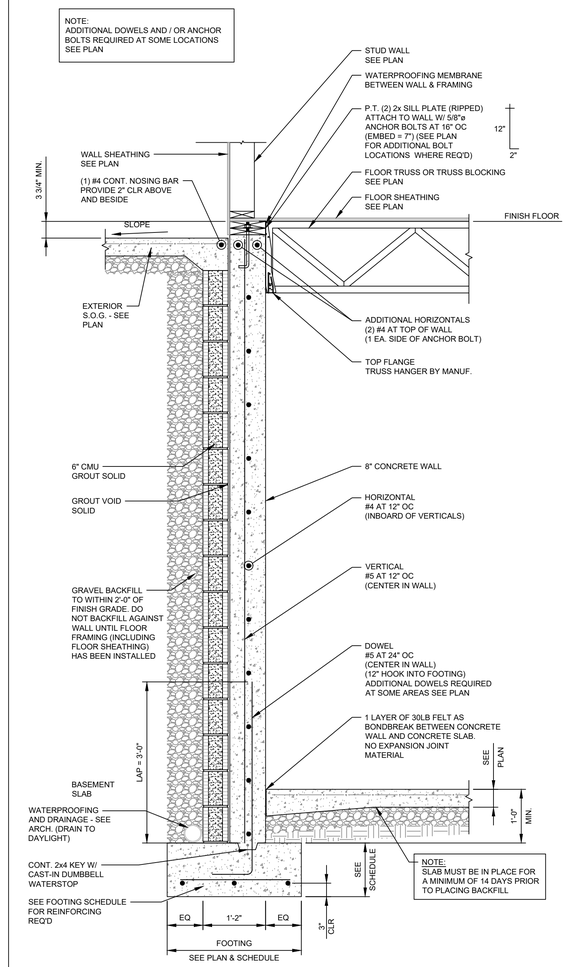

TRUSSES BEARING AT BASEMENT WALL AT GARAGE (4)

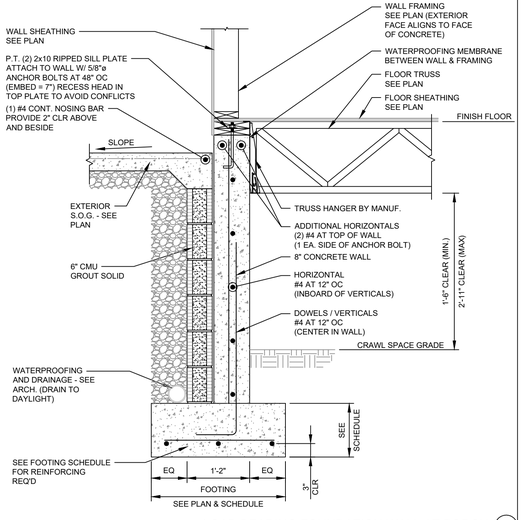

LOAD BEARING FOUNDATION WALL AT PORCH (5)

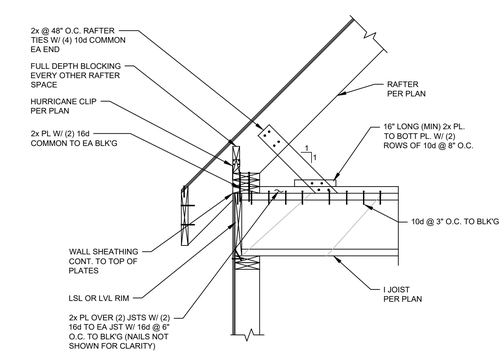

BEARING I-JOIST CONNECTION (8)

REVISIONS	BY

STONEWALL
STRUCTURAL ENGINEERING
9203 Baileywick Rd, Suite #200
Raleigh, NC 27615
(919)407-8663
stonewalleng.com Lic. # P-0951

NORTH CAROLINA PROFESSIONAL ENGINEER SEAL 059145 JACOB H. BLANKENSHIP

New Residential Construciton
Eliel Lopez
163 Summer Creek Ln
Sanford, North Carolina 27332

DATE	02.18.2025
SCALE	AS SHOWN
DRAWN	CTG
JOB	25-1177
SHEET	SD2

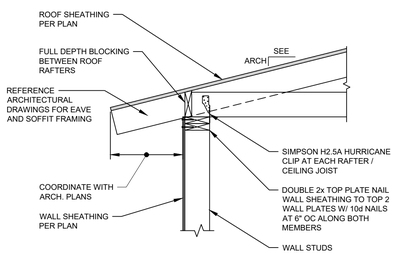

TYPICAL RAFTER BEARING (1)

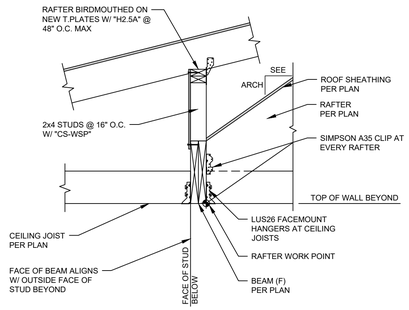

SHED ROOF OVER BUILD (2)

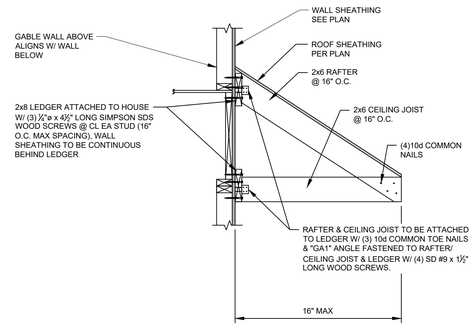

PORTICO ROOF OVERHANG (3)

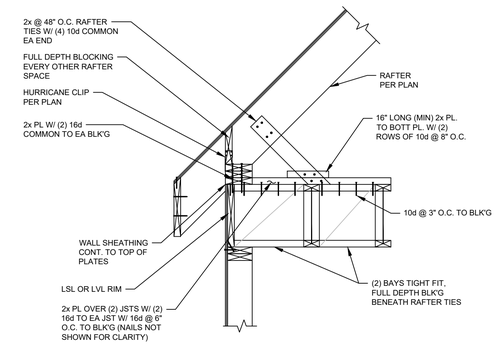

RAFTER TO PERPENDICULAR I-JOIST CONNECTION (4)

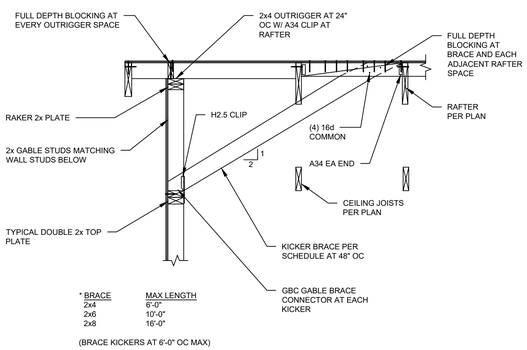

* BRACE	MAX LENGTH
2x4	6'-0"
2x6	10'-0"
2x8	16'-0"

(BRACE KICKERS AT 6'-0" OC MAX)

STICK FRAMED GABLE ENDWALL BRACING (5)

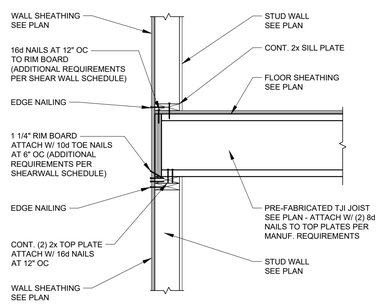

FLOOR LOAD BEARING AT EXTERIOR WALL (6)

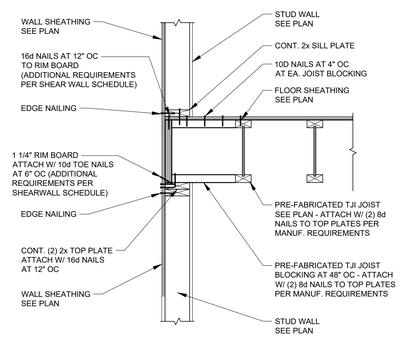

FLOOR NON LOAD BEARING AT EXTERIOR WALL (7)

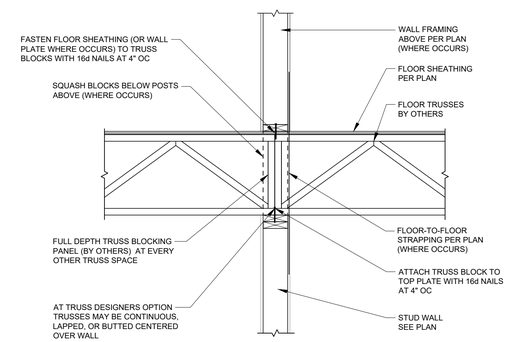

TRUSS BEARING AT INTERIOR WALL (8)

NOTE:
AT 2-PLY LVL, GANG WITH (3) ROWS OF 16d NAILS AT 16" OC
AT 3-PLY LVL, GANG WITH (3) ROWS OF 5" LONG STRUCTURAL SCREWS AT 16" OC
INSTALL (6) ADDITIONAL FASTENERS AT LOCATIONS OF ADJACENT BEAMS OR GIRDER TRUSSES

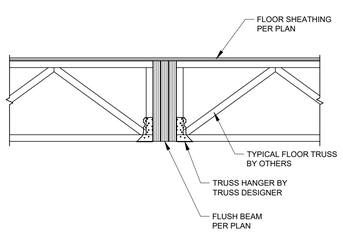

TRUSS BEARING AT FLUSH BEAM (9)

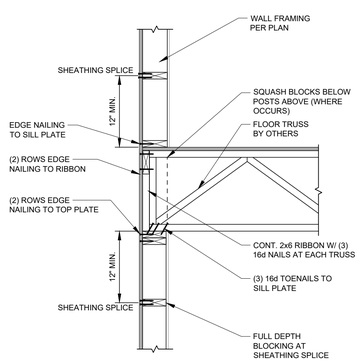

FLOOR TRUSS BEARING AT EXTERIOR WALL (10)

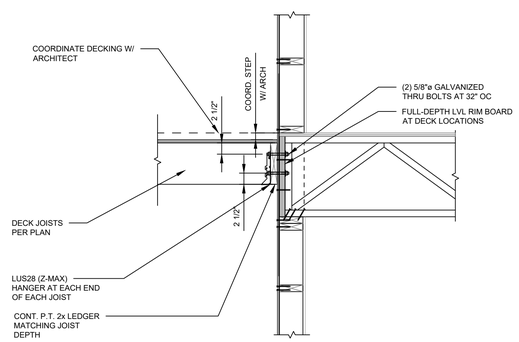

DECK FRAMING AT EXTERIOR WALL (11)

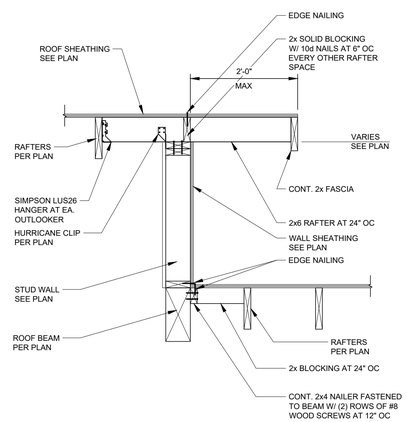

DORMER ROOF PARALLEL TO SIDE WALL (12)

REVISIONS	BY

STONEWALL
STRUCTURAL ENGINEERING
9203 Baileywick Rd, Suite #200
Raleigh, NC 27615
(919)407-8663
stonewalleng.com Lic. # P-0951

NORTH CAROLINA PROFESSIONAL SEAL 059145 ENGINEER JACOB H. BLANKENSHIP

New Residential Construction
Eliel Lopez
163 Summer Creek Ln
Sanford, North Carolina 27332

DATE	02.18.2025
SCALE	AS SHOWN
DRAWN	CTG
JOB	25-1177
SHEET	SD3